H
G
F
I
A
STORMWATER TREATMENT PLANT - ITIPC9000
LAMINATION TANK - BUILDING A
Vmin= 965 m³
Q= 33,22 l/s
LAMINATION TANK - BUILDING B
Vmin= 1515 m³
Q= 52,12 l/s
LAMINATION TANK - BUILDING C
Vmin= 966 m³
Q= 33,25 l/s
STORMWATER TREATMENT PLANT - ITIPC9000
STORMWATER RAIN WATER TREATMENT - ITIPC12500
FIREFIGHTING PRESSURIZATION TANK
FIREFIGHTING PRESSURIZATION PUMP STATION WITH WATER RESERVOIR
OIL WATER PIPEWORK INSTALLED UNDERGROUND, PEHD
OD: De1000
OD: De800
OD: De630
OD: De500
OD: De400
OD: De315
OD: De250
OD: De200
OD: De160
0,25%
a
b
A
B
C
D
E
F
CONTINUOS STORMWATER RUNOFF TREATMENT PLANT (BUILDING A + C):
INLET
By-pass
Flow splitting chamber
Grit separator
Oil separator with coalescing filter
BY-PASS OUTLET
OUTLET

Danilo Ebalginelli 19.09.2024 11:49:38 GMT+02:00

Item	Flow rate l/s	Uncovered hardstandings m²	Useful vol. l	Oil vol. l	Grit vol. l	Flow splitting chamber			Grit separator			Oil separator		
						Item	ØxH mm	Ø pipes mm	Item	ØxH mm	Ø pipes mm	Item	ØxH mm	Ø pipes mm
IPC9000	50	9000	15357	750	5000	PSC103131IPC	1116x1140	315	NDS9000	2250x2625	315	NDOFC9000 50LS	2250x2625	315

Oil water drainage systems - External Area

1 : 350

DR - Legenda Tubazioni

DR - Pipe Systems Legend

OD 🟩	Scarico Acque Oleose *Oil water*

PUBLIC HEALTH SERVICES NOTES:
- All drainage stacks to be equipped of inspectable trap, extended all the way to the roof and well ventilated.
- The condensing water collections shall be separated from the ones they flow into prior wet permanent trap or dry anti-odor trap interposition.
- The waste water collections shall be separated from the ones they flow into prior inspectable trap interposition.
- The rainwater collections shall be separated from soil waste water system up to drain pits that are located upstream of the public sewage inspection block.
- All drainage points collected below the intake quote of public sewage shall be merged into water collection tank equipped with electro-pumps.
- The testing operations shall be completed maintaining the drainage system visible and smooth.
- Providing inspection points for main drain pipe upstream of each connection, elbow or special fitting.
- All primary and secondary drainage pipework, unless accordingly indicated, must have the following minimum slopes:

Drainage branches to vertical stack	i=2%
Soil waste main drain pipe	i=1%
Rainwater/*Oil water*	i=0.25%

TYPICAL SECTION OF MAIN DRAIN PIPE ON DIFFERENT ELEVATIONS

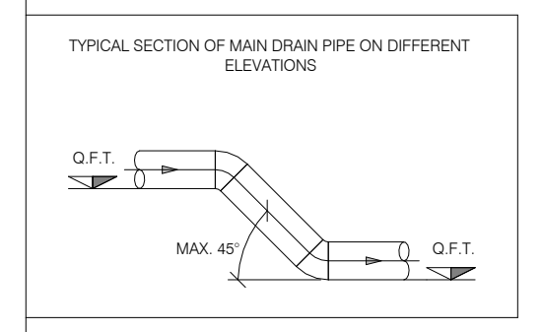

TYPICAL SECTION OF DRAINAGE BRANCHES TO MAIN DRAIN PIPE

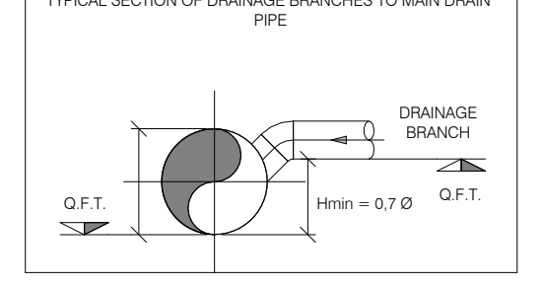

TYPICAL SECTION OF CONNECTION BETWEEN PRESSURED DRAIN PIPE TO DRAINAGE SYSTEM

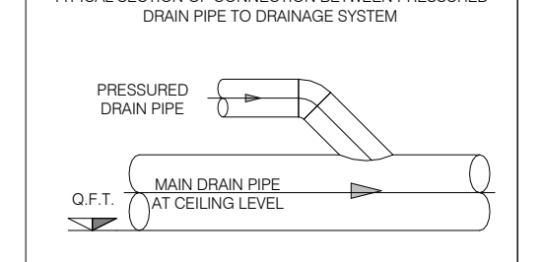

GENERAL NOTES:
- The present drawing is valid for mechanical systems object of tender only.
- Every dimension and position of materials and equipment must be verified on site by the contractor, who must promptly give notice of possible interferences.
- Possible non surveyed systems shall be preserved; whereas needed, they shall be modified and their functioning reactivated by the contractor.
- Accurate positions of equipment, materials, piping, ducts, connections to existing systems shall be defined by the contractor and submitted to the works supervisor.
- Final sizing depending on actually installed equipment and materials manufacturer.
- All equipment shall be easily maintainable and accessible through access panels or similar solutions, including where not explicitly indicated.
- The contractor shall size and certify all supports in a workmanlike manner and in respect of every prescription regarding antiseismic design.
- Constructive detail drawings necessary to the correct execution of the works shall be drafted by the manufacturer.
- Installations of elements on site shall comply with every prescription and recommendation by the producers and by the highest trade standards in the relevant fields, including acoustics and fire prevention.
- Every work considered and described, evaluated based on available documentation, shall be reevaluated and analyzed during the construction phase, after system verification following adequate survey of the existing situation.
- The contractor shall accurately check the project and give notice of any inaccuracy, incompleteness o discrepancy with any code or law.
- In case of piping or duct material change, the same pressure drop of the design material shall be guaranteed.
- All construction and coordination drawings, along with all material sheets, shall be submitted to the works supervisor for approval.
- Every infrastructure needed to deliver functioning and testable systems shall be verified on site by the contractor.
-The bottom tube measurements refer to the project Zero Level

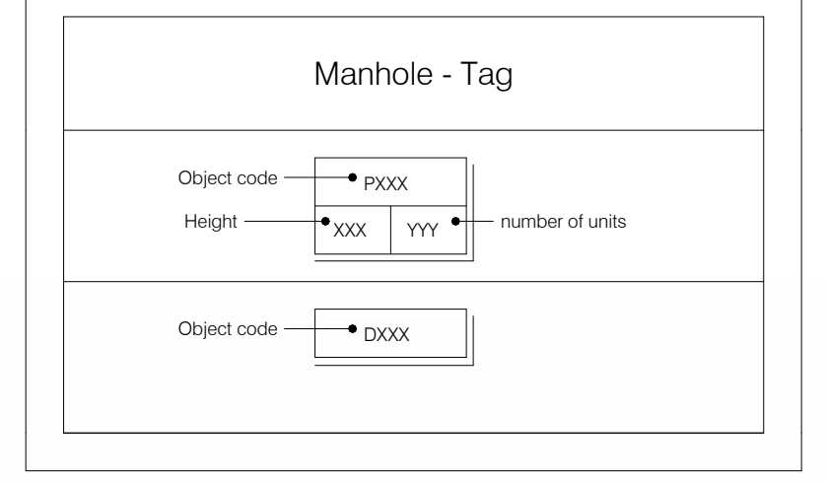

CONTINUOS STORMWATER RUNOFF TREATMENT PLANT (BUILDING B):

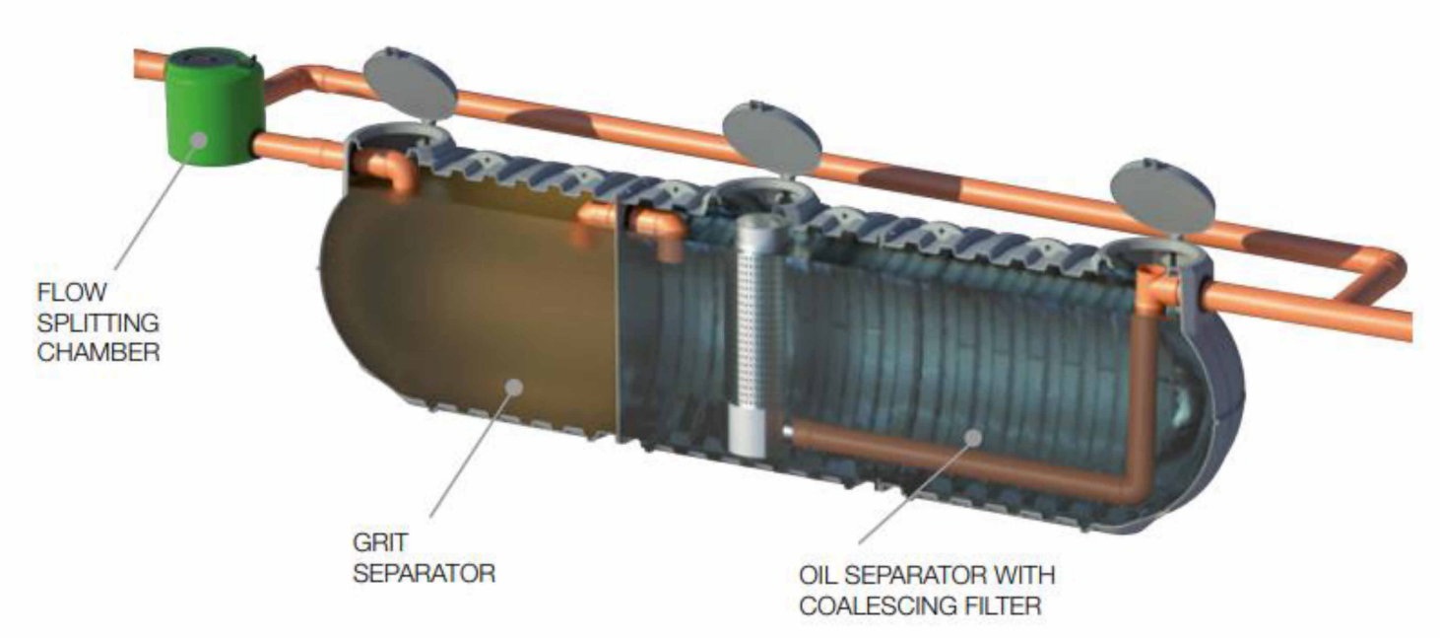

Item	Flow rate l/s	Uncovered hardstandings m²	Flow splitting chamber			One-piece grit/oil separator				
			Item	Ø x H mm	ØI-ØO-ØBp mm	LxWxH mm	Useful vol. l	Oil vol. l	Grit vol. l	ØI/O mm
ITIPC10000	65	11500	PSC103131IPC	1160x1140	315-315-315	7880x2100x 2200	20500	1000	6700	315-315
ITIPC12500	85	15300	PSC103131IPC	1160x1140	315-315-315	10140x2100x 2200	27000	1300	8600	315-315
ITIPC18000*	120	22000	PSC103131IPC	1160x1140	315-315-315	14660x2100x 2200	40000	1850	13000	315-315

b Updated calculation

a External Systems finalised regarding design development
Due to phasing:
- Design development of building B & C
- Building A drawings issued to reflect

NOTE GENERALI
1. Il presente documento è valido solo per il progetto di "Disciplina".
2. Per la corretta interpretazione del disegno è necessaria la lettura congiunta di tutti gli elaborati di progetto e grafici.
3. Il dimensionamento e la redazione degli elaborati esecutivi e costruttivi finali sono a carico dell'Appaltatore, dovranno essere approvati dalla D.L.
4. Tutti i dettagli descrittivi sono contenuti nei documenti Capitolato Speciale, Relazione e Computo Metrico.
5. Qualsiasi riproduzione, uso o modifica del progetto e dei disegni è strettamente vietata a meno di autorizzazione da parte del progettista, che rimane l'autore e il proprietario morale del progetto.
6. Sarà onere dell'impresa una verifica di rispondenza con quanto contenuto nei documenti di progetto rispetto all'elaborato di L10.
7. Tutte le quote sia altimetriche che dimensionali devono essere verificate e accuratamente rilevate in sito a cura dell'appaltatore dei lavori prima dell'esecuzione dei lavori, informare immediatamente la D.L. in caso di difformità.
8. Sarà onere dell'impresa una verifica di rispondenza con quanto contenuto nei documenti di progetto rispetto al Progetto di Prevenzione Incendi. In tutti gli attraversamenti di solai o pareti che delimitano compartimenti antincendio, devono essere previste adeguate barriere tagliafiamma in modo da ripristinare la resistenza al fuoco.
9. Il progetto potrà essere oggetto di revisioni a seguito di ricezione commenti degli Enti Comunali alle pratiche amministrative.
10. Tutte le finiture e le colorazioni saranno da campionare e definire con la D.L.
11. Gli impianti meccanici ed elettrici a progetto potrebbero risultare complanari o coincidenti, non sono stati sviluppati eventuali abbassamenti di quota puntuali o spostamenti della distribuzione. In fase di progettazione costruttiva sarà necessario verificare il coordinamento interdisciplinare.
12. Alcuni Pozzetti gettati in opera sono in continuità con altre opere strutturali quali solette o fondazioni, in fase di cantiere sarà necessario dunque prevedere il coordinamento tra i vari elementi per la realizzazione di un unico getto.
13. Tutti gli staffaggi ed i tiranti rappresentati nel progetto sono a solo titolo esemplificativo. I disegni tipologico devono dunque essere utilizzati come esempio per la realizzazione dei disegni costruttivi degli staffaggi. Prima dell 'installazione in opera, l 'Appaltatore dovrà sempre consegnare alla D.L., le relazioni di verifica di tenuta alle azioni sismiche.
14. La stratigrafia edile sopra i serbatoi di gasolio dei Generatori interrati dovrà essere realizzata prevedendo che gli stessi non possano essere danneggiati dall'eventuale passaggio di automezzi pesanti.
15. Il sistema fotovoltaico e di supporto dello stesso dovrà essere sviluppato dall 'appaltatore nel progetto esecutivo e costruttivo nel rispetto della relazione di calcolo fotovoltaico e dai limiti della normativa vigente.
16. Si ritiene esclusa dal presente appalto la fornitura delle disintermediate: Rack nelle Data hall e dell'infrastruttura dati ad essi connessa, i Gruppi Elettrogeni comprensivi di serbatoio interrato e di tutti i sistemi ausiliri (tubazioni di ricarica, sistema di monitoraggio delle perdite ecc); la fornitura dei Moduli prefabbricati; Chiller; Fan Wall.

GENERAL NOTES:
1. *This document is valid only for the "Subject"" project.*
2. *For the correct interpretation of the drawing, it is necessary to read all project and graphic drawings together.*
3. *The sizing and drafting of the final executive and construction drawings are the responsibility of the Contractor; they must be approved by the DP.*
4. *All descriptive details are contained in the Special Specifications, Report and Metric Computation documents.*
5. *Any reproduction, use or modification of the design and drawings is strictly prohibited unless authorized by the designer, who remains the author and moral owner of the project.*
6. *It will be the responsibility of the contractor to verify that what is contained in the design documents corresponds to the L10 drawing.*
7. *All elevations, both elevational and dimensional, shall be verified and accurately surveyed on site by the work contractor prior to execution of the work, informing the DP immediately in case of discrepancies.*
8. *It will be the contractor's responsibility to verify compliance with what is contained in the project documents against the Fire Prevention Project. In all floor or wall penetrations bordering fire compartments, adequate fire barriers shall be provided so as to restore fire resistance.*
9. *The project may be subject to revisions following receipt of comments from the Municipal Authorities to the administrative files.*
10. *All finishes and color will be to be sampled and defined with the DP.*
11. *Mechanical and electrical systems as designed may be coplanar or coincident; any punctual lowering of elevations or shifts in distribution have not been developed. Interdisciplinary coordination will need to be developed during construction design.*
12. *Some poured manholes are in continuity with other structural works such as slabs or foundations, therefore, coordination between the various elements will need to be provided at the construction site to make a single casting.*
13. *All brackets and tie-rods represented in the design are for illustrative purposes only. The type drawings should therefore be used as examples for the construction drawings of the stirrups. Prior to installation in place, the Contractor shall always deliver to the DP, the reports of verification of resistance to seismic actions.*
14. *The construction stratigraphy over the diesel tanks of the underground Generators shall be carried out providing that the same cannot be damaged by the possible passage of heavy vehicles.*
15. *The photovoltaic system and support of the same shall be developed by the contractor in the executive and construction design in compliance with the photovoltaic calculation report and from the limits of the regulations.*
16. *It is considered excluded from this contract the supply of the disintermediate: Racks in the Data halls and the data infrastructure connected to them, the Diesel Generators including underground tank and all auxiliary systems (charging pipes, leakage monitoring system, etc.); the Prefabricated Modules; Chillers; Fan Walls.*

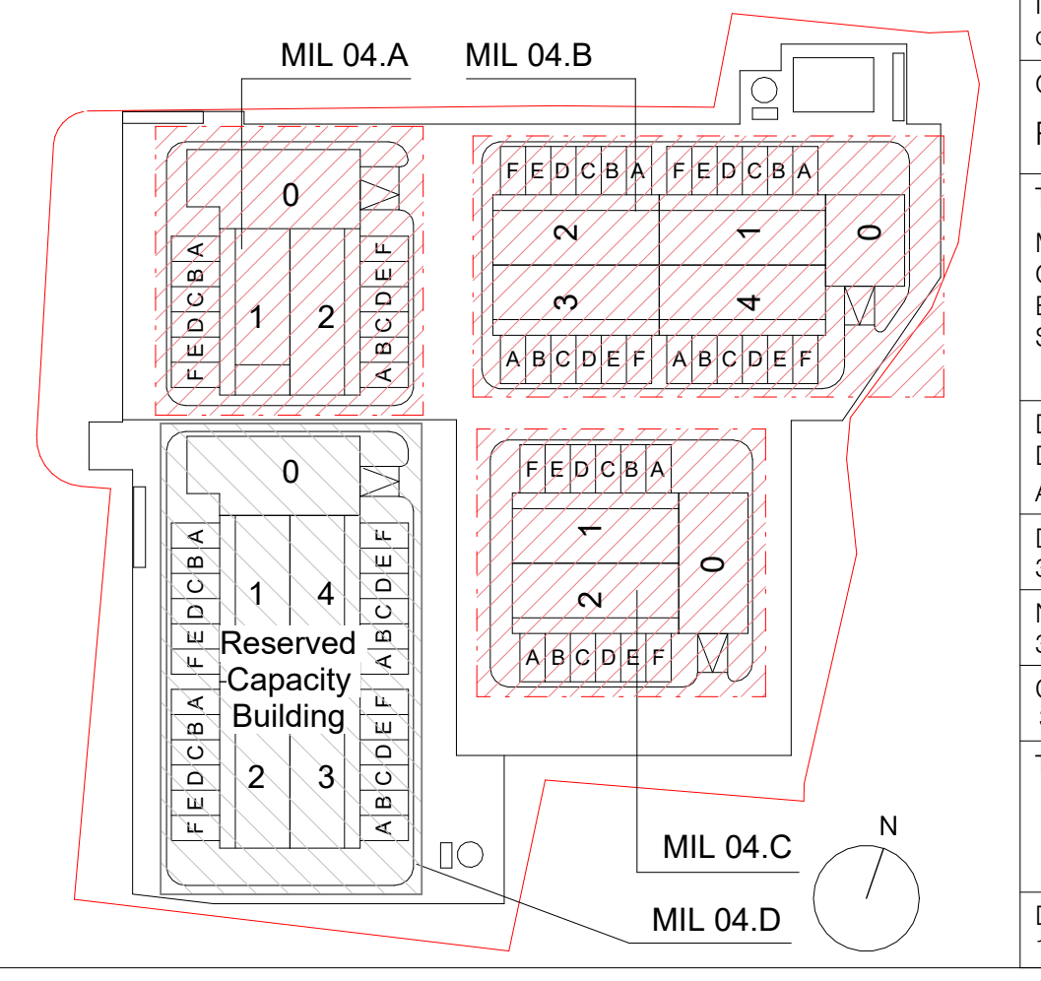

REV	DATA / DATE:	DESCRIZIONE / DESCRIPTION:
-	31/08/2023	First Emission
a	27/10/2023	Revision a
b	15/11/2023	Revision b

PROGETTISTA / DESIGNER:

L22

L22 è una divisione di:
Lombardini22 S.p.A.
Via Lombardini 22 20143 Milano, Italia
T +39 02 36 59 62 00 F +39 02 83 20 13 97
info@l22.it www.l22.it

Black & White Engineering:
69 Wilson Street London, EC2A 2BB
United Kingdom
www.bw-engineering.com

STRUTTURE:
Studio Progetti Strutturali
Ing. Arturo Donadio
S.P.S. S.r.l. www.spssrl-mi.it
Via M. Gioia, 64 - 20125 Milano, Italia
segreteria@spssrl-mi.it T. 02/6694887

COMMITTENTE / CLIENT:
STACK INFRASTRUCTURE
INFRASTRUCTURE ITALIA LAND 4 S.r.l.
Via del Bosco Rinnovato, 6 Palazzo U4 20090 Assago (MI)

PROGETTO / PROJECT:
MIL 04
Alzaia Naviglio Pavese snc,
Vellezzo Bellini (PV)

PROGETTISTA / DESIGNER:
Ing. Roberto Cereda - Iscritto all'Ordine
degli Ing. di Brescia n°N.2609

OGGETTO / OBJECT:
RIBA4 - MIL 04

TITOLO / DESCRIPTION:
Mechanical Systems
Oil water drainage systems
External Area - Aree esterne
Scarico acque oleose

DISEGNATO DA: DRAWN BY: APT	CONTROLLATO DA: CHECKED BY: MIC
DATA/ DATE: 31/08/2023	SCALA / SCALE: 1:350
NOME FILE / FILE NAME: 3604_EM-5301bG	
COMMESSA / JOB: 3604	FORMATO / SHEET: A0++
TAVOLA / DRAWING: EM-5301	
DATA REV.: 15/11/2023	REV.: b

© Lombardini22 S.p.A. ES DT (rev.-) (L.663/41 Art.2575)